Quorum

Series of kitchen sinks

INSTRUCTIONS FOR TOP MOUNT SINK INSTALLATIONS

Eljer

TOOLS REQUIRED:

- Pencil
- Tape Measure
- Straight Edge
- Pencil Compass
- Silicone Caulk

1 If you are replacing an existing sink, remove the old sink and proceed to step 5. If you are installing in a new countertop, continue with step 2.

2 Place the sink upside-down on the countertop, positioning sink front to back so that the bowls will not interfere with the cabinets below. Use a pencil to trace around the outside of the sink, then remove the sink from the countertop (see Figure 1).

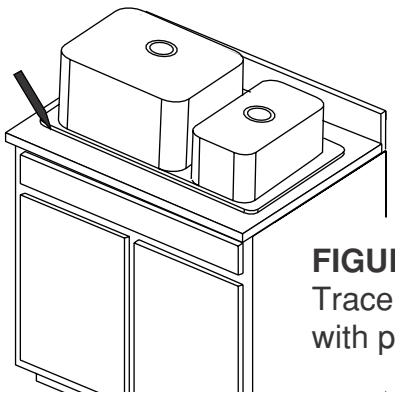

FIGURE 1
Trace edge of sink with pencil

3 Measure in 1/2" from the sink outline and draw a second line inside the first line. Use the compass to draw a 1-1/2" radius at each corner of the second line (see Figure 2). This inside line will be the cutout line.

4 Following your countertop manufacturer's instruction for cutting, cut out the opening for the sink along the line you drew in step 2. Take care not to remove too much material. Erase all remaining pencil marks.

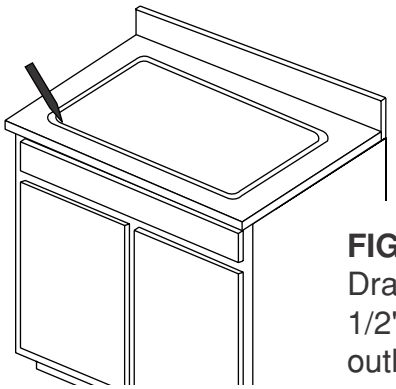

FIGURE 2
Draw cutout line 1/2" in from sink outline

5 Test fit the sink in the countertop cutout with the faucet flange to the back. If an adjustment needs to be made to the cutout, do so now. Remove the sink from the countertop.

6 Install the faucet and drains according to the manufacturer's instructions. Take care not to overtighten any fasteners or drain connections - this could damage the sink.

7 Apply a bead of silicone around the countertop cutout (see Figure 3). Gently lower the sink into the countertop and wipe away any excess silicone. Connect the drain fittings to the waste trap. Connect the water supply to the faucet. Allow the silicone to cure according to the manufacturer's instructions

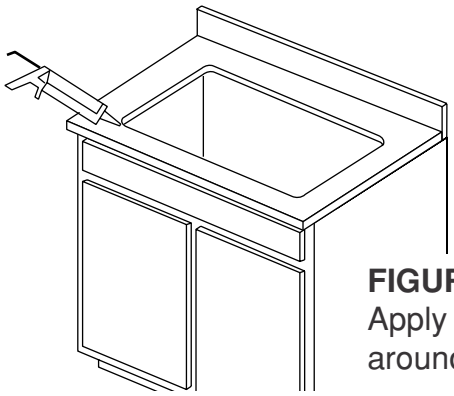

FIGURE 3
Apply silicone caulk around the opening

The non-porous Quorum surface in incredibly easy to clean - and you don't need any special cleaning products. After everyday use, it can be wiped clean with a damp cloth or sponge and a mild detergent or general-purpose cleaner. Use a Scotch Brite® pad to remove tough stains such as coffee, juice, berries, and cigarette burns. To remove superficial scratches on both solid and matrix colors, rub a wet, green Scotch Brite® pad in a circular motion until scratches are gone. Clean thoroughly with soap and water, rinse thoroughly with plenty of water and dry the surface.